SPECIFICATION FOR APPROVAL

PAD LAYOUT: (UNIT: mm)

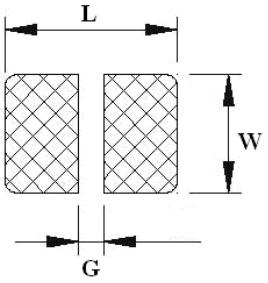

ITEM	L (Ref)	G (Ref)	W (Ref)
WCIL2520C	3.31	1.27	2.54
WCIL3225C	4.40	2.00	2.70

PACKAGING QUANTITY: (UNIT: mm)

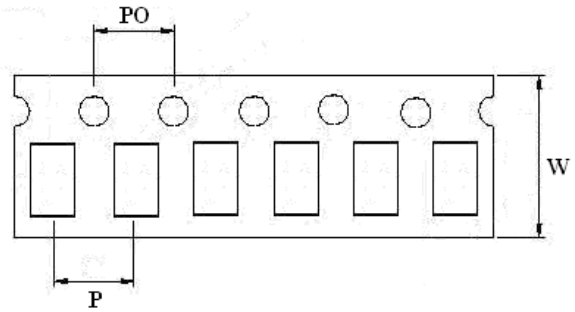

TYPE	P(Ref)	P0 (Ref)	W(Ref)	BULK	PCS / REEL
WCIL2520C	4.0	4.0	8.0	v	2000
WCIL3225C	4.0	4.0	8.0	v	2000

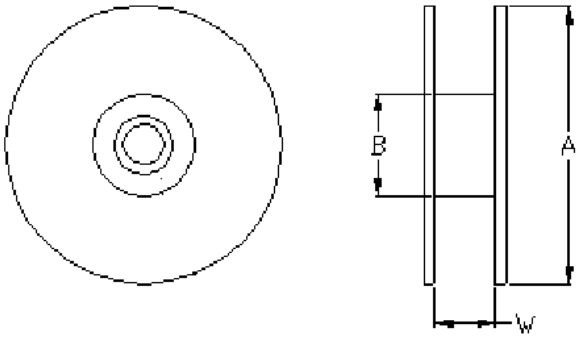

TYPE	A(Ref)	B(Ref)	W(Ref)
WCIL2520C	180	60	8.4
WCIL3225C	180	60	8.4

SPECIFICATION FOR APPROVAL

RELIABILITY AND TEST CONDITIONS:

<table>
<tr><th>Item</th><th>Performance</th><th>Test Condition</th></tr>
<tr><td>Operating Temperature</td><td>-40~+105℃</td><td></td></tr>
<tr><td>Rated Current</td><td>Refer to standard electrical characteristics list.</td><td></td></tr>
<tr><td>Temperature Rise Test</td><td>40℃ max. (Δt)</td><td></td></tr>
<tr><td>Solder heat Resistance</td><td>Appearance: No significant abnormality.
Inductance change: Within ± 30%.</td><td>Preheat:150℃,60sec.
Solder : H63A
Solder tamperature:260+0-5℃
Flux: rosin
Dip time:10sec. Max.
 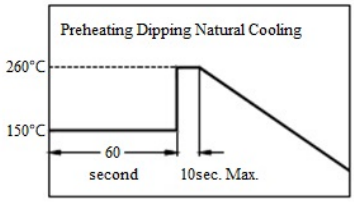
</td></tr>
<tr><td>Thermal shock</td><td rowspan="3">Appearance: no damage
Inductance: within±30%of initial value.</td><td>Condition for 1 cycle
Step1:-25±2℃ 30±3 min.
Step2:Room temperature 15 min.
Step3:+105±5℃ 30±3 min.
Step4:Room temperature 15 min.
Number of cycles:50
<table><tr><th>Phase</th><th>Temperature(℃)</th><th>Time(min)</th></tr><tr><td>1</td><td>-25±2℃</td><td>30±3</td></tr><tr><td>2</td><td>Room Temp.</td><td>15</td></tr><tr><td>3</td><td>+105±2℃</td><td>30±3</td></tr><tr><td>4</td><td>Room Temp.</td><td>15</td></tr></table>
Measured:50 times</td></tr>
<tr><td>Humidity Resistance Test</td><td>Temperature:40±2℃.
Applied current: rated current.
Duration:500 hrs.
Humidity:90~95%</td></tr>
<tr><td>High Temperature Resistance Test</td><td>Temperature:105±2℃.
Applied current: rated current.
Duration:500 hrs.</td></tr>
</table>